BLOCKS 1,2,3,4,5,6,7,8,9,10, 11,12,13,14,A,B,C,D,E, G,H,I,K,L,M,O

GRAVES: 3'10" X 10'0"

1	1
2	2
3	3
4	4
5	5
6	6
1	1
2	2
3	3
4	4
5	5
6	6

SECTIONS 5,6

GRAVES: 4'0" X 10'0"

1	1		1	1
2	2		2	2
3	3		3	3
4	4		4	4
1	1	4'0" WALKWAY	1	1
2	2		2	2
3	3		3	3
4	4		4	4

SECTIONS 15,16,17

GRAVES: 4'0" X 12'0"

1	1
2	2
3	3
4	4
5	5
6	6
1	1
2	2
3	3
4	4
5	5
6	6

SECTION/BLOCK DETAILS
CITY CEMETERY
BENSON, MINNESOTA

BLOCKS
1,2,3,4,5,6,7,8,9,10, 11,12,13,14,A,B,C,D,E, G,H,I,K,L,M,O

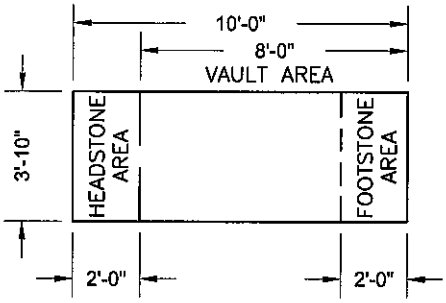

NOTE: FOOTSTONE MAY NOT BE INSTALLED BEFORE INTERNMENT.

SECTIONS 5,6

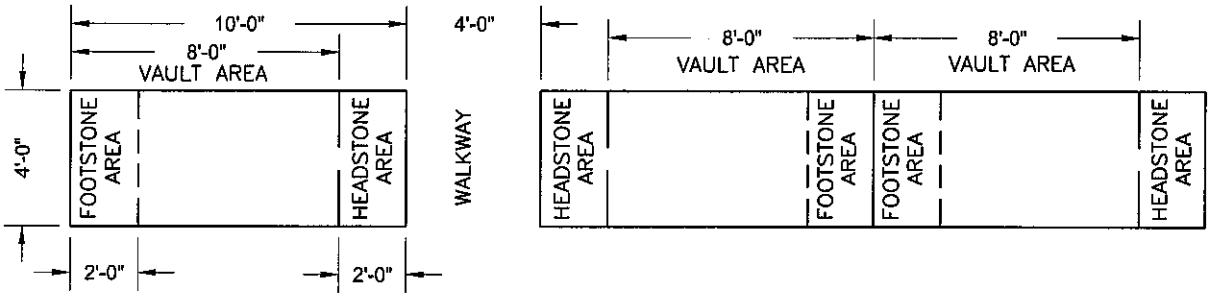

NOTES:
1. FOOTSTONE MAY NOT BE INSTALLED BEFORE INTERNMENT.
2. ONLY FLAT MARKERS ARE PERMITTED IN SECTIONS 5 & 6.

SECTIONS 15,16,17,18,19,20

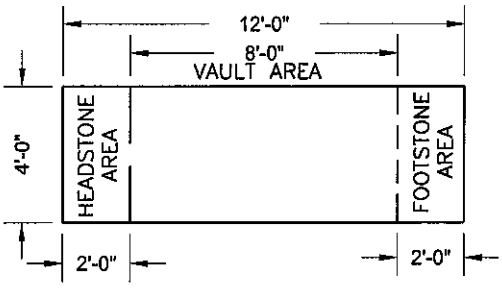

NOTE: FOR ALL SECTIONS STANDARD GRAVE OPENING IS 3'0" WIDE X 8'0" LONG.

GRAVE DETAILS
CITY CEMETERY
BENSON, MINNESOTA

GRAVE MARKER DETAILS–SINGLE

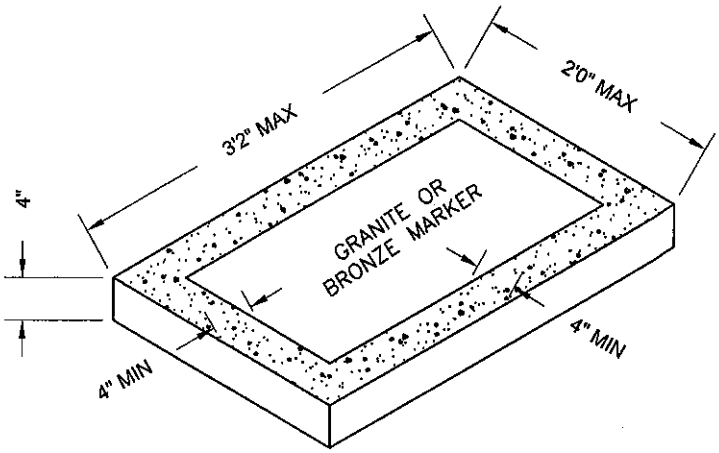

GRAVE MARKER DETAILS–DOUBLE

NOTE: REQUIRES AT LEAST 2 ADJACENT GRAVE SPACES

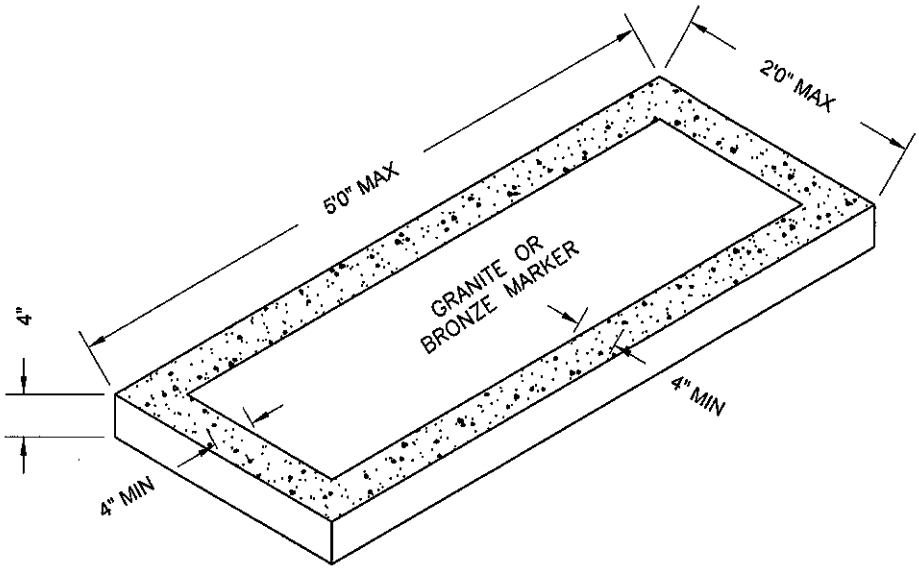

NOTE: MARKERS SHALL BE LAID FLUSH WITH THE EXISTING GROUND COVER.
ADDING FILL MATERIAL TO MAKE THE MARKER LEVEL IS NOT ALLOWED.

GRAVE MARKER DETAILS
CITY CEMETERY
BENSON, MINNESOTA

SINGLE GRAVE SPACE

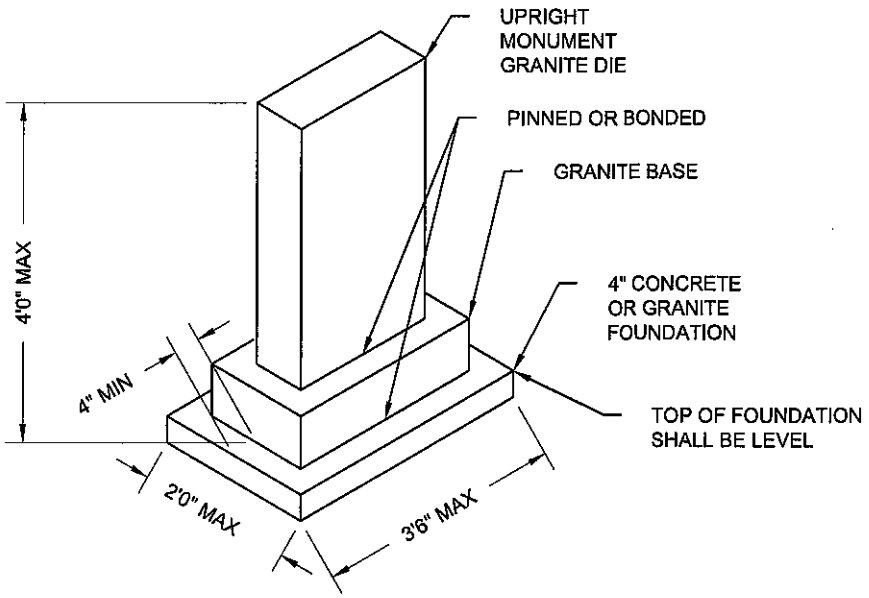

DOUBLE OR MULTIPLE GRAVE SPACE

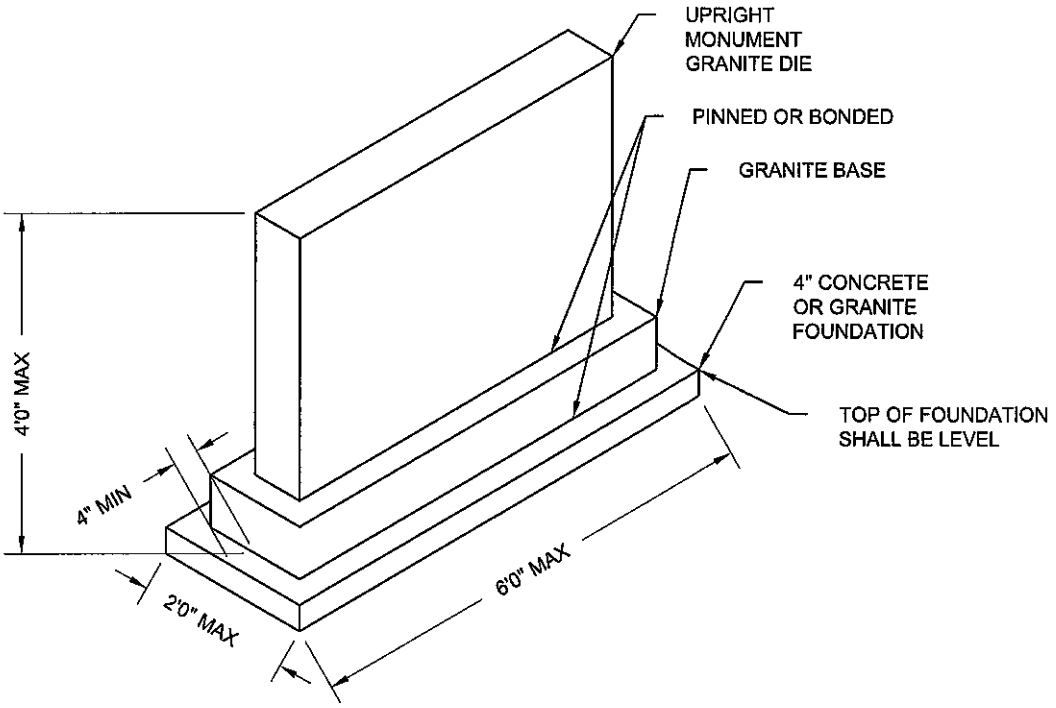

NOTE: MAXIMUM ALLOWABLE DIMENSIONS ARE SHOWN

MONUMENT DETAILS
CITY CEMETERY
BENSON, MINNESOTA